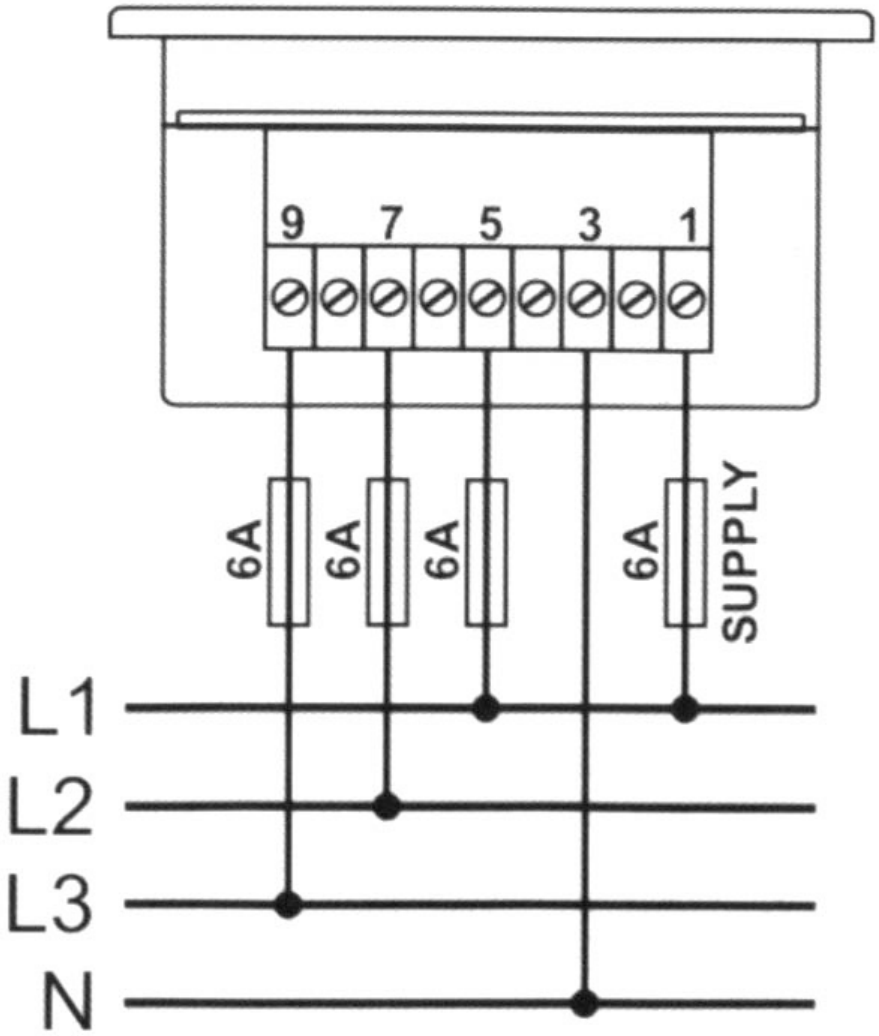
9
7
5
3
1
6A
6A
6A
6A
SUPPLY
L1
L2
L3
N